THIS DWG. IS SOLE PROPERTYOF **NEOMETRIX ENGINEERING PVT. LTD.** UNAUTHORISED USE OF THIS DWG. OR MAKING PRODUCT AS PER THIS DWG. WITHOUT OUR PERMISSION OR ANY OTHER MISUSE IS NOT PERMITTED.

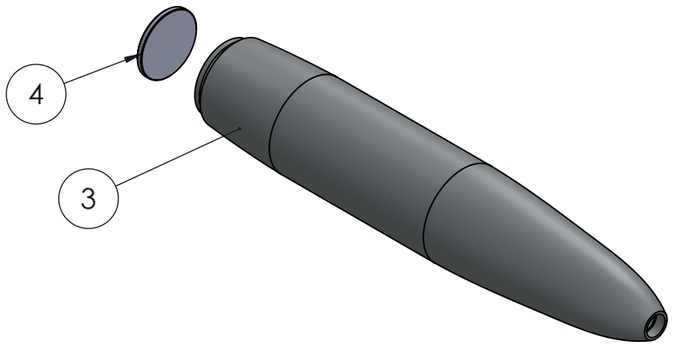

EXPLODED VIEW OF ASSEMBLY

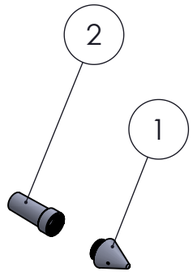

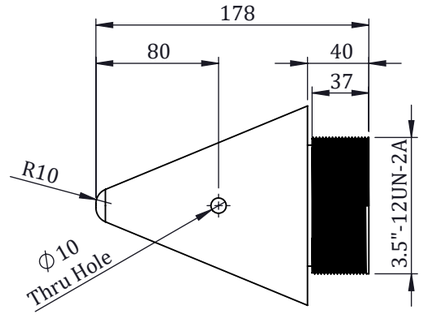

FRONT VIEW

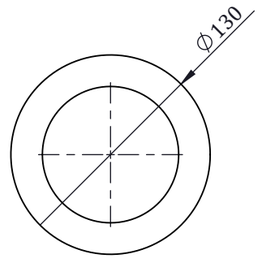

SIDE VIEW

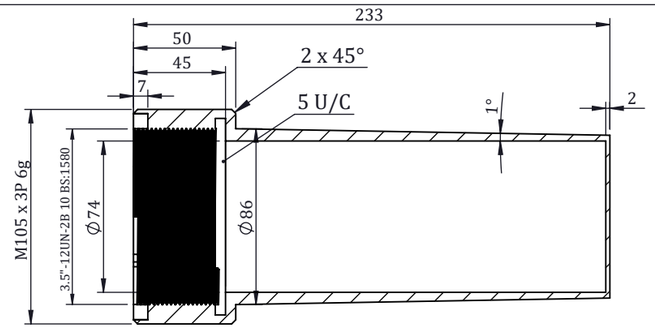

SECTION G-G

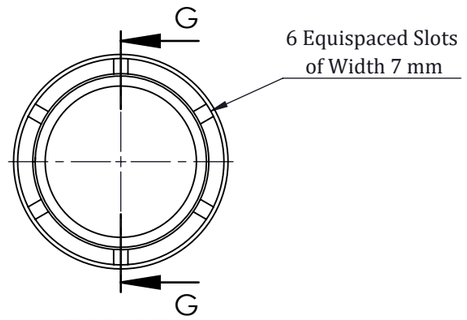

SIDE VIEW

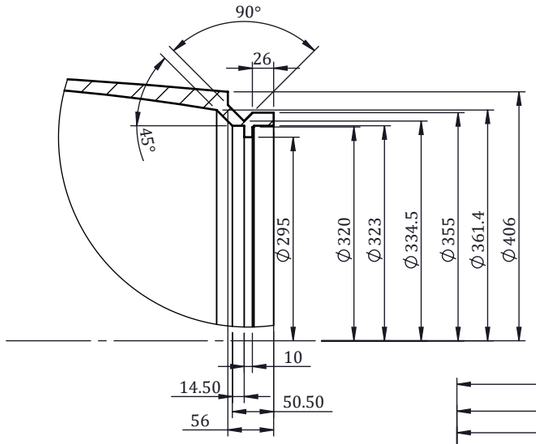

DETAIL I

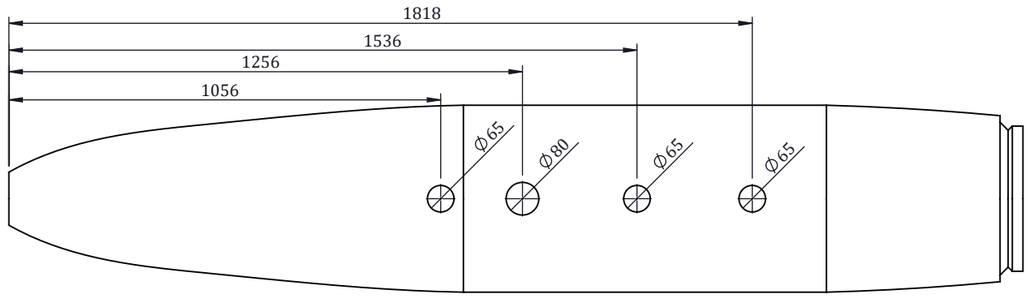

TOP VIEW

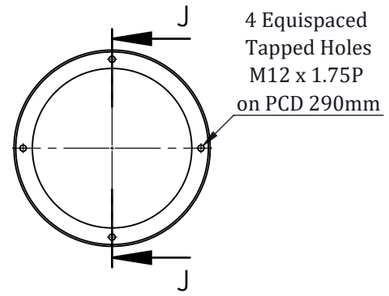

FRONT VIEW

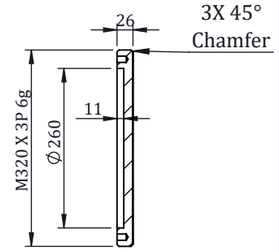

SECTION J-J

3

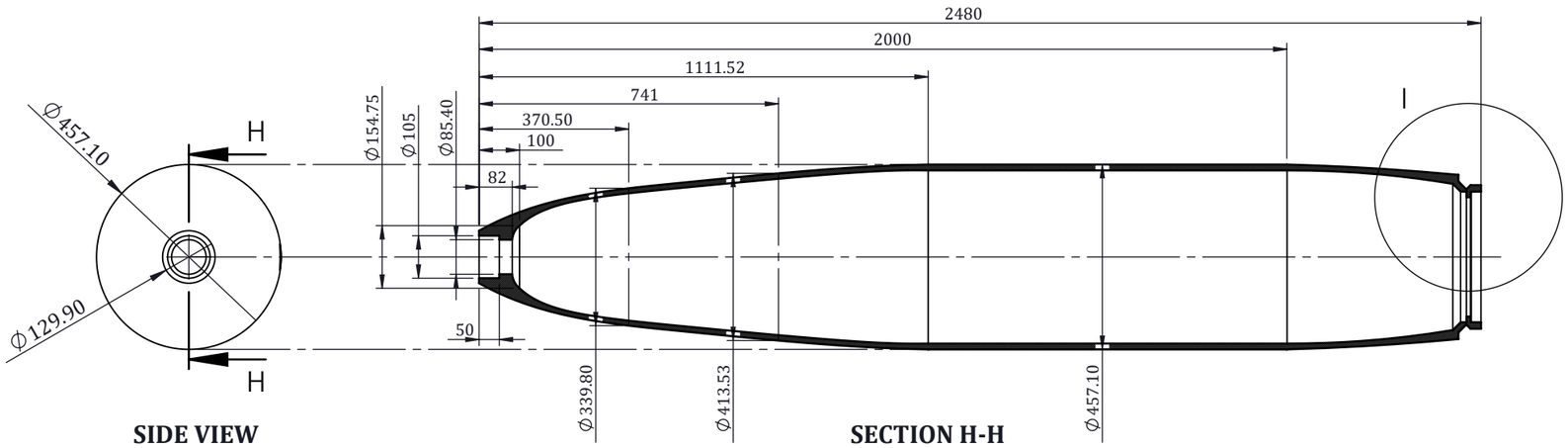

SIDE VIEW

SECTION H-H

Note:

- All dimensions are in mm, unless otherwise specified.
- Material : Special Steel Alloy (40Ni6Cr4Mo3)
- Fabrication : Using Forged & Heat Treated Steel.
- Flow should be along the axis.
- All sharp edges and burrs area to be removed.
- Surfaces should have smoot contours.

NEOMETRIX
www.neometrixgroup.com
NEOMETRIX ENGINEERING PVT. LTD.
E-148, Sector-63, Noida, UP-201301
Tel. No. :- 0120-4500800
Fax No. :- 0120-4500888
Email :- contact@neometrixgroup.com

MAIN TITLE	2000 Lb Casing	Q.A No.	
SUB - TITLE	FULL ASSEMBLY	Cross Ref. Doc. No.	
CODE	A2324	Customer Dwg./Ref. No.	
CUSTOMER	----	Note :	
END USER	----		
PO. NO.	-----		

PROJECTION				Size	Scale	Sheet No.	Sheet Of.	NEO. DWG. No.	REV
	DRAWN BY & DATE	ZISHAN	07/08/2020	A3	NTS	01	01	T-PED-A2324-MDWG-FA	00
	CHECKED BY & DATE	SM	07/08/2020						
	APPROVED BY & DATE	S.P.S	07/08/2020						