THIS DWG. IS SOLE PROPERTYOF **NEOMETRIX DEFENCE LTD.**
UNAUTHORISED USE OF THIS DWG. OR MAKING PRODUCT AS PER THIS DWG. WITHOUT OUR PERMISSION OR ANY OTHER MISUSE IS NOT PERMITTED.

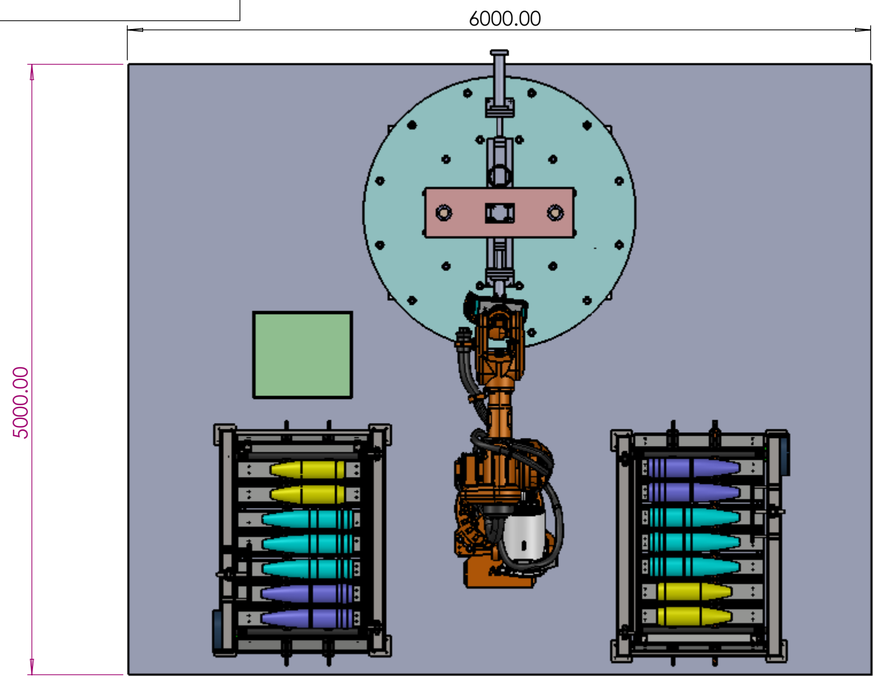

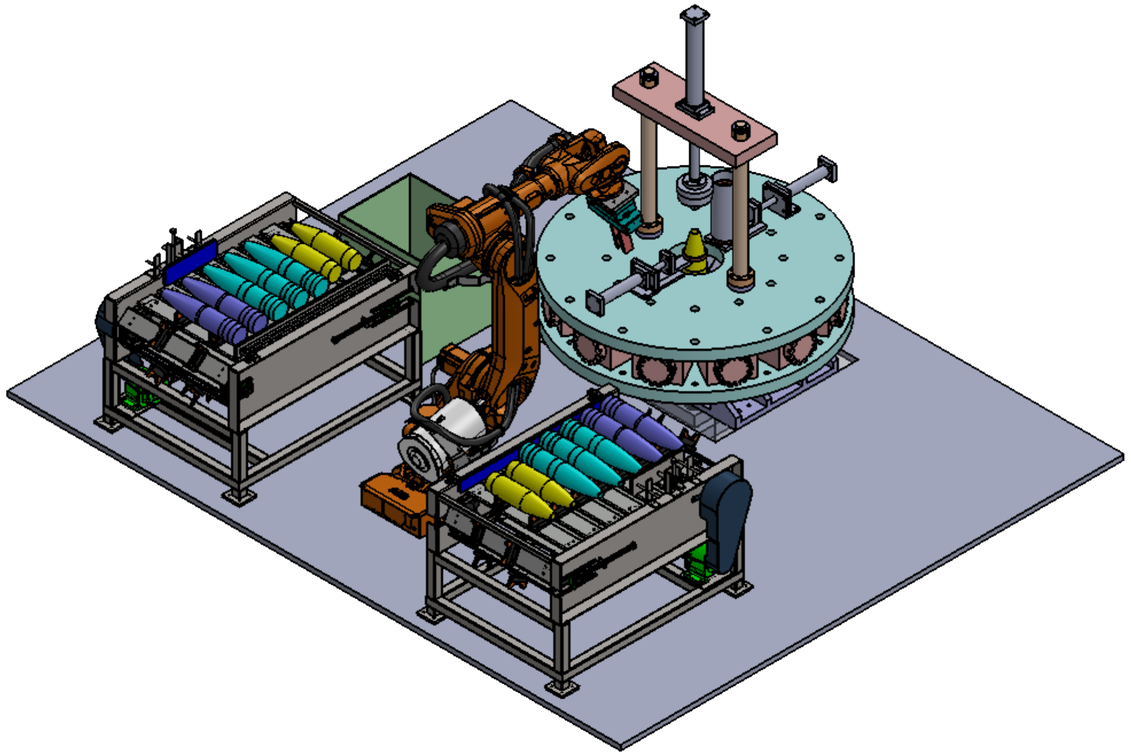

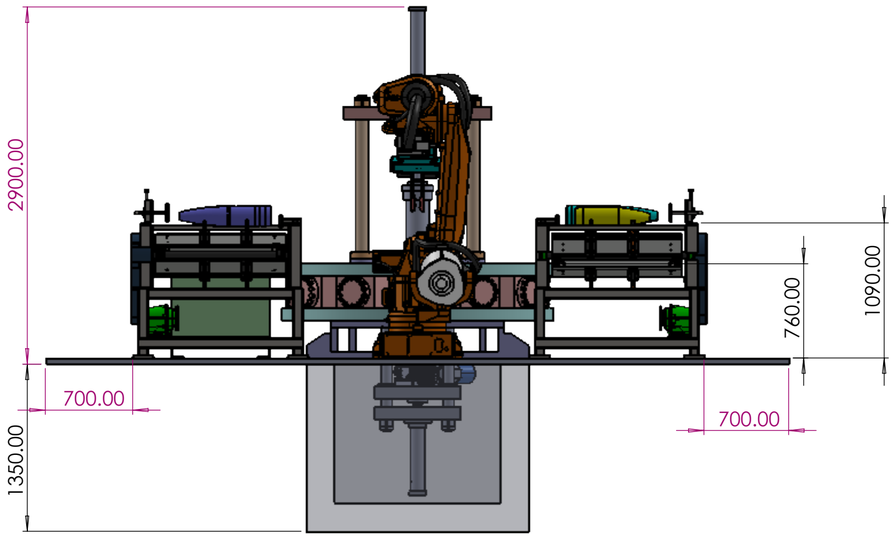

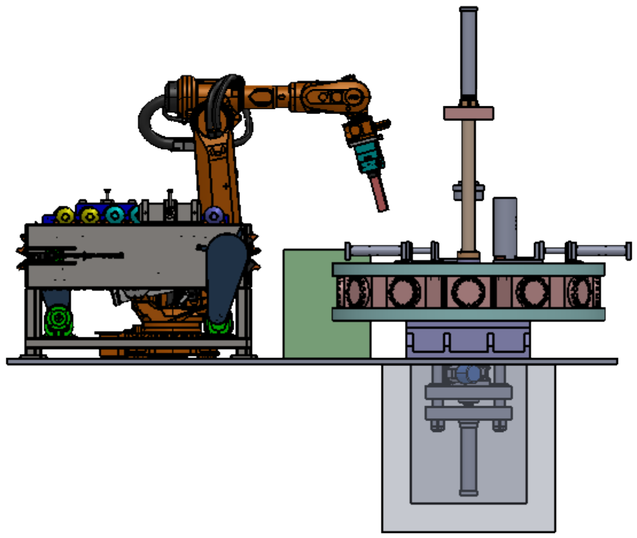

NOTE - ALL THE DIMENSIONS ARE IN MM.

NEOMETRIX DEFENCE LIMITED
E-148 , SECTOR 63 , NOIDA , UP-201301 INDIA
Tel No.: +91 0120 4500800
Fax No.: +91 0120 4500888
E.mail: contact@neometrixgroup.com
Design Dept.: design@neometrixgroup.com

TITLE	AUTOMATIC COPPER BAND PRESS MACHINE	QA No.	
SUB-TITLE	TENTATIVE OVERALL GA DRAWING	Cross Ref Doc No.:	
SRS CODE	--	Customer Dwg Ref No.	
CUSTOMER	ST ENGINEERING	NOTE :	
END USER	ST ENGINEERING		
TD/PO. No.	--	DATED	

PROJECTION									
	DRWN	M.G	21-04-2025	SIZE	SCALE	SHEET No	SHEET Of	NEO DWG No.	REV
	CHK.	P.T	21-04-2025	A3	NTS	01	01	T-DAP- TENTATIVE OVERALL GA DRAWING	00
	APPR.	P.T	21-04-2025						

THIS DWG. IS SOLE PROPERTYOF **NEOMETRIX DEFENCE LTD.** UNAUTHORISED USE OF THIS DWG. OR MAKING PRODUCT AS PER THIS DWG. WITHOUT OUR PERMISSION OR ANY OTHER MISUSE IS NOT PERMITTED.

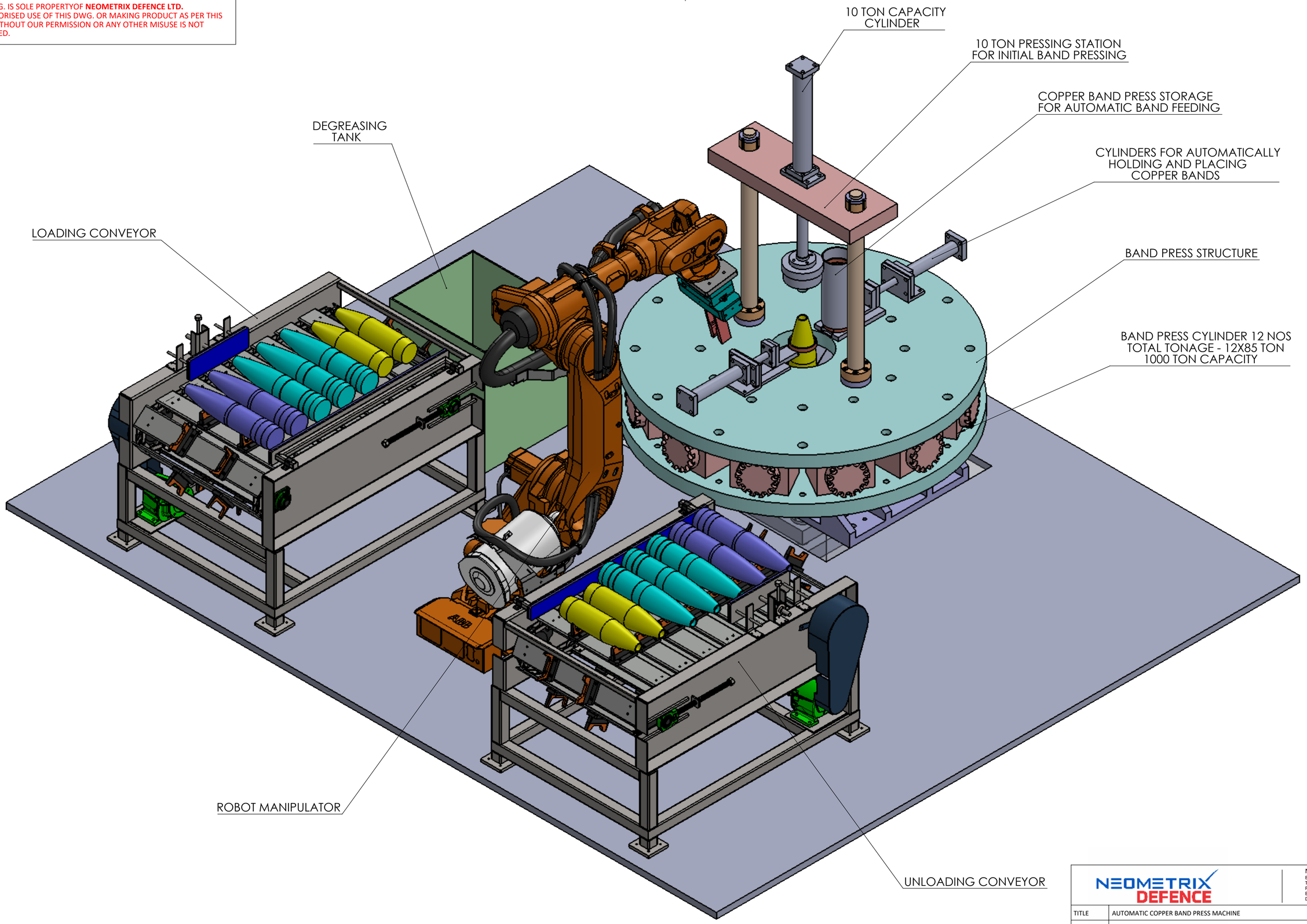

NOTE - ALL THE DIMENSIONS ARE IN MM.

NEOMETRIX DEFENCE LIMITED
E-148 , SECTOR 63 , NOIDA , UP-201301 INDIA
Tel No.: +91 0120 4500800
Fax No.: +91 0120 4500888
E.mail: contact@neometrixgroup.com
Design Dept.: design@neometrixgroup.com

TITLE	AUTOMATIC COPPER BAND PRESS MACHINE	QA No.	
SUB-TITLE	TENTATIVE OVERALL GA DRAWING	Cross Ref Doc No.:	
SRS CODE	--	Customer Dwg Ref No.	
CUSTOMER	ST ENGINEERING	NOTE :	
END USER	ST ENGINEERING		
TD/PO. No.	--	DATED	

PROJECTION				SIZE	SCALE	SHEET No	SHEET Of	NEO DWG No.	REV
	DRWN	M.G	21-04-2025						
	CHK.	P.T	21-04-2025						
	APPR.	P.T	21-04-2025	A3	NTS	01	01	T-DAP- TENTATIVE OVERALL GA DRAWING	00

THIS DWG. IS SOLE PROPERTYOF **NEOMETRIX DEFENCE LTD.**
UNAUTHORISED USE OF THIS DWG. OR MAKING PRODUCT AS PER THIS DWG. WITHOUT OUR PERMISSION OR ANY OTHER MISUSE IS NOT PERMITTED.

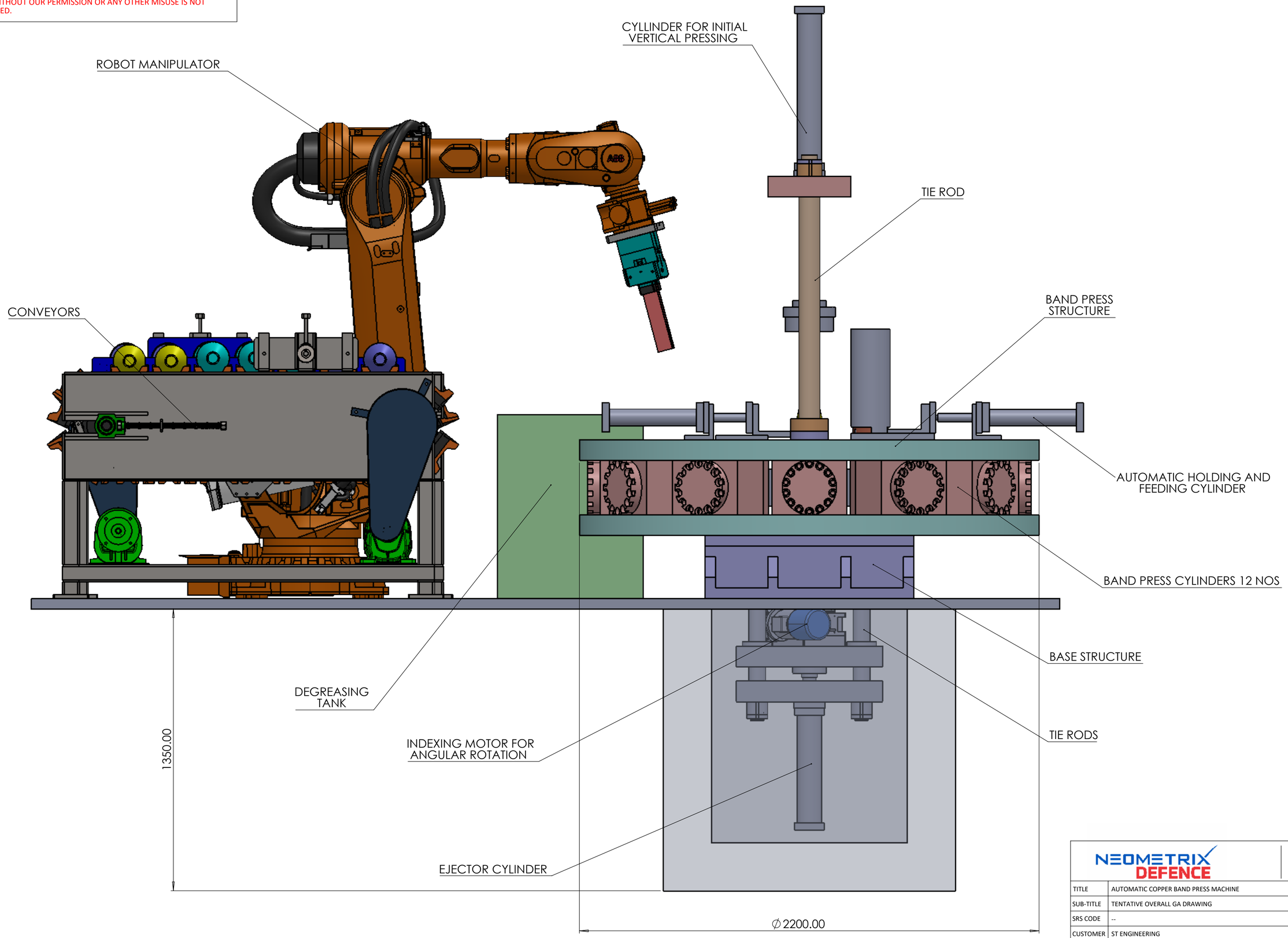

NOTE - ALL THE DIMENSIONS ARE IN MM.

NEOMETRIX DEFENCE LIMITED
E-148 , SECTOR 63 , NOIDA , UP-201301 INDIA
Tel No.: +91 0120 4500800
Fax No.: +91 0120 4500888
E.mail: contact@neometrixgroup.com
Design Dept.: design@neometrixgroup.com

TITLE	AUTOMATIC COPPER BAND PRESS MACHINE							QA No.	
SUB-TITLE	TENTATIVE OVERALL GA DRAWING							Cross Ref Doc No.:	
SRS CODE	--							Customer Dwg Ref No.	
CUSTOMER	ST ENGINEERING							NOTE :	
END USER	ST ENGINEERING								
TD/PO. No.	--				DATED				
PROJECTION	DRWN	M.G	21-04-2025	SIZE	SCALE	SHEET No	SHEET Of	NEO DWG No.	REV
	CHK.	P.T	21-04-2025						
	APPR.	P.T	21-04-2025	A3	NTS	01	01	T-DAP- TENTATIVE OVERALL GA DRAWING	00