THIS DWG. IS SOLE PROPERTYOF **PASKALS FLUID SYSTEMS PVT. LTD.**
UNAUTHORISED USE OF THIS DWG. OR MAKING PRODUCT AS PER THIS DWG.
WITHOUT OUR PERMISSION OR ANY OTHER MISUSE IS NOT PERMITTED.

COLOR	TUBE SIZE
	¼" Swagelok
	½" Swagelok

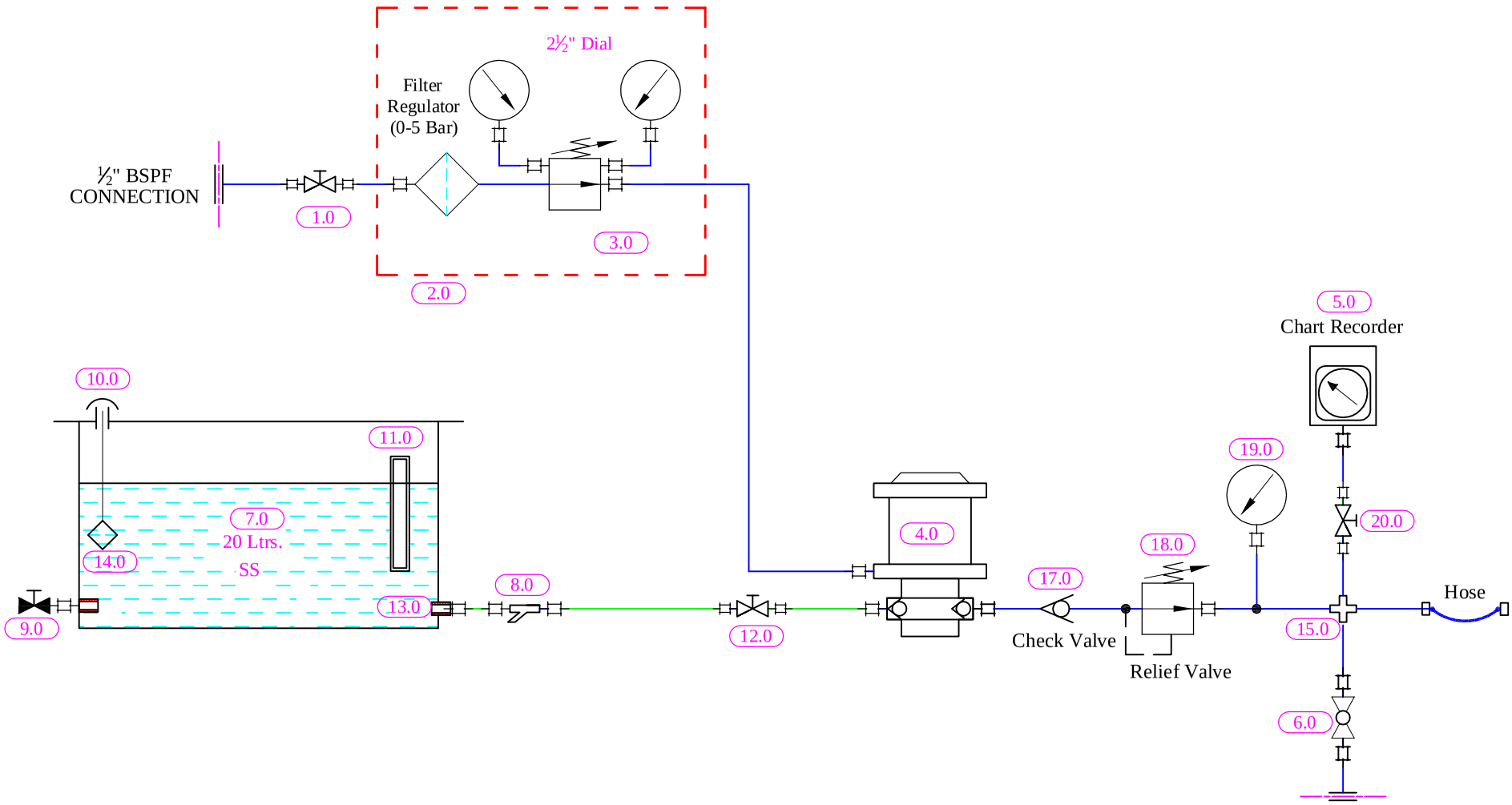

CIRCUIT DIAGRAM

PASKALS
Advanced Fluid Systems

PASKALS FLUID SYSTEMS PRIVATE LIMITED
E-148, SECTOR-63, NOIDA-201301 (U.P.).
Tel. Phone No.- 0120-4500800
Fax No.- 01 20-4500888
E-Mail: Contact@neometrix.in

MAIN-TITLE	CIRCUIT DIAGRAM
SUB - TITLE	----
MODEL NO.	---
CUSTOMER	---
END USER	---
APPLICATION	-----
PROJECTION	

O.A No.
CROSS REF. DOC. -
CUSTOME R DWG. / REF. No.
NOTES:

DRAWN BY & DATE	SSR	30/07/16	SHEET	SCALE	SHEET NO	SHEET OF	PASKALS DWG. NO.	Rev.
CHECKED BY & DATE	SP	30/07/16	A4	NTS	01	01	T-PED-HDWG-CKT	00
APPROVED BY & DATE	SPS	30/07/16						