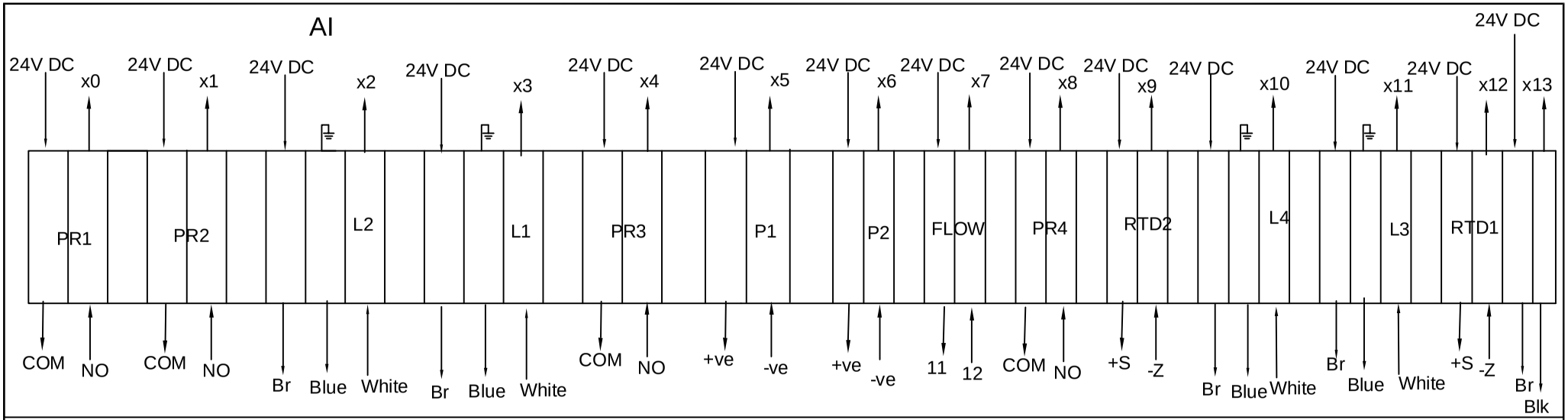

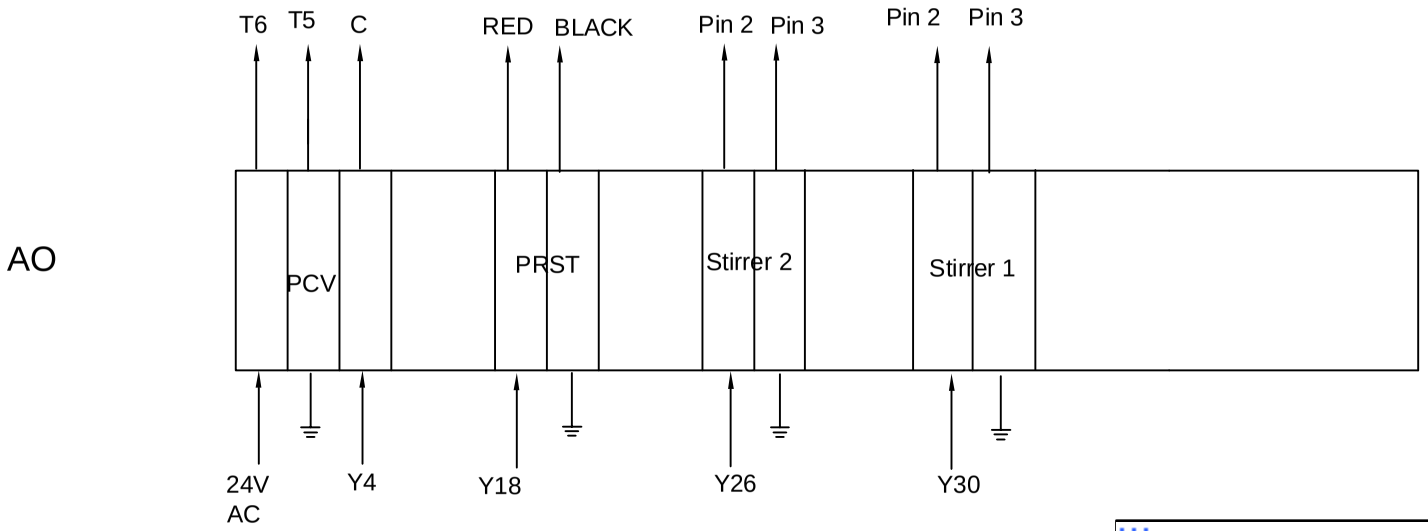

JUNCTION BOX 3

NEOMETRIX
www.neometrixtechnology.com
NEOMETRIX TECHNOLOGY PRIVATE LIMITED
W-16, GREATER KAILASH-II NEW DELHI-110048.
Contactus@neometrixtechnology.com
Tel. Phone No.- 011-41636570-2; 011-41636808-9
Fax No.- 011-41636573
E-Mail:

MAIN TITLE		O.A No.	
SUB - TITLE		CROSS REF. DOC.	-
DETAILS	-	CUSTOMER DWG. / REF. No.	-
CUSTOMER		NOTES:	
END USER			
APPLICATION			

PROJECTION	DRAWN BY & DATE	SK	27.3.06	SIZE	SCALE	SHEET No.	OF	NEOMETRIX DWG. NO.	Rev.
	CHECKED BY & DATE	NISHAL	27.3.06	A3	NTS	01	01		0

PDF created with pdfFactory trial version www.pdffactory.com